NEMS Mediator

March 17, 2015

URL: https://svnemc.ncep.noaa.gov/projects/nems/branches/NUOPC/development
Revision: 52376

NEMS

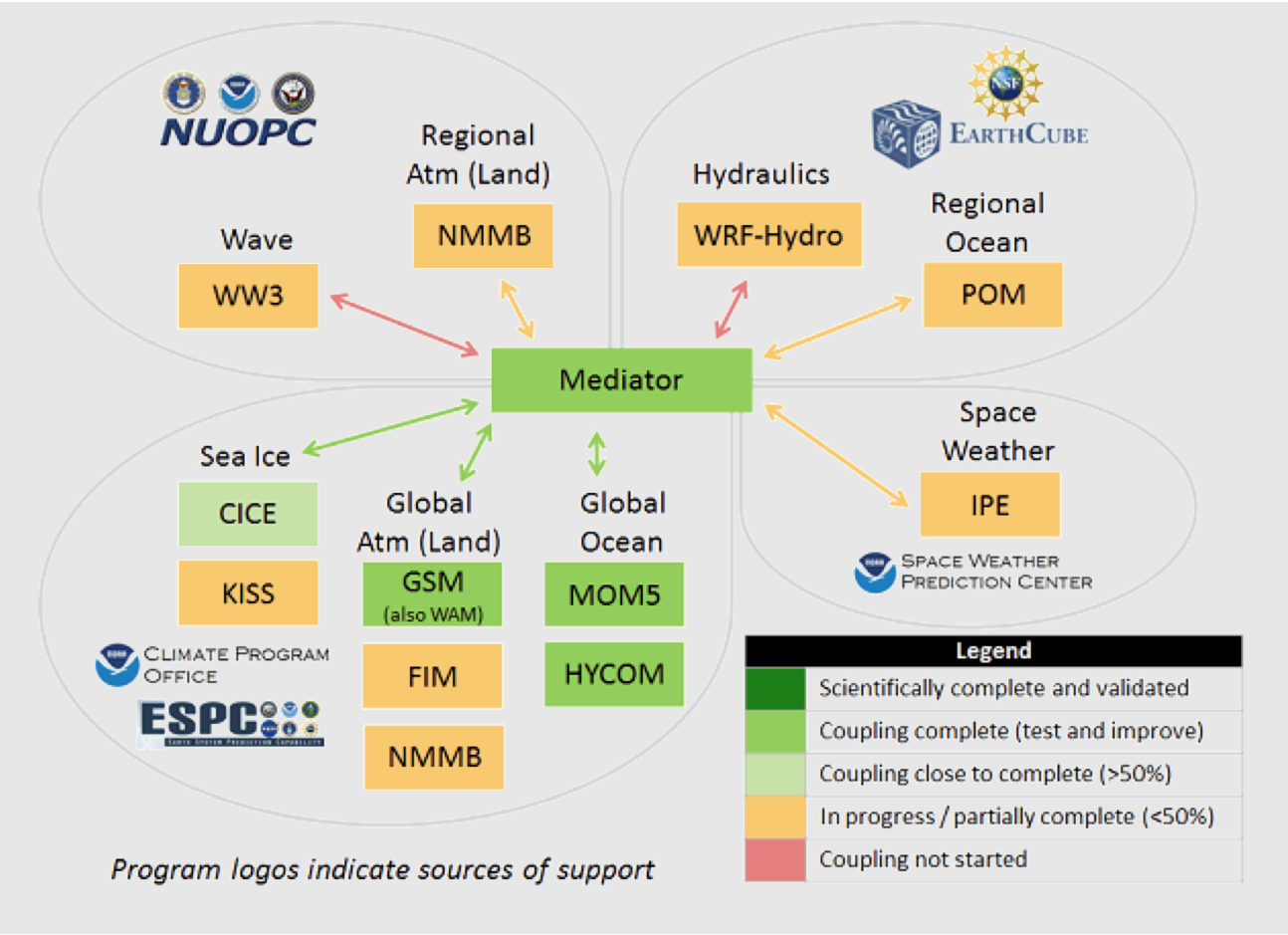

* as of January, 2015

- Mediator acts as the hub of the system. All coupled fields pass through the mediator in the current implementation.

The Mediator

<u>The Mediator</u>

sends and receives data to/from components on model grids
has to connect fields between different models
- automatically by name matching
- custom code

regrids (interpolates between grids)
- set regrid (conservative, bilinear, etc) method on a field by field basis

may have to derive some fields between models
- merge fields
- accumulate/average fields
- custom code

<u>Mediator Datatypes</u>

ESMF_State – Import and Export, required for connecting with NUOPC, (Mediator has nested states), states have
ESMF_Field – 1 field of data

ESMF_FieldBundle – an array of fields in a single datatype. This is the primary mediator datatype as it makes it easier to carry around lots of fields and to operate on them.

ESMF_Grid - stores grid information
ESMF_RouteHandle – supports regridding operations
ESMF_Clock – stores time information

NEMS gsm-mom-cice configure file

```
/scratch2/portfolios/NCEPDEV/ptmp/Anthony.Craig/RT_tcraig/GSM_CICE_MOM5>cat nems.configure
##############################################
####  NEMS Run-Time Configuration File  #####
##############################################

# MED #
med_model:                  nems
med_petlist_bounds:          60 65

# ATM #
atm_model:                  gsm
atm_petlist_bounds:          0 31

# OCN #
ocn_model:                  mom5
ocn_petlist_bounds:          32 55

# ICE #
ice_model:                  cice
ice_petlist_bounds:          56 59

# Run Sequence #
runSeq::
  @7200.0
    OCN -> MED
    MED MedPhase_slow
    MED -> OCN
    OCN
    @3600.0
      MED MedPhase_fast_before
      MED -> ATM
      MED -> ICE
      ATM
      ICE
      ATM -> MED
      ICE -> MED
      MED MedPhase_fast_after
    @
  @
::
```

PET (processor) layouts

coupling timesteps, (@)

connectors (->)

MODELS

mediator (MED)

Schematic

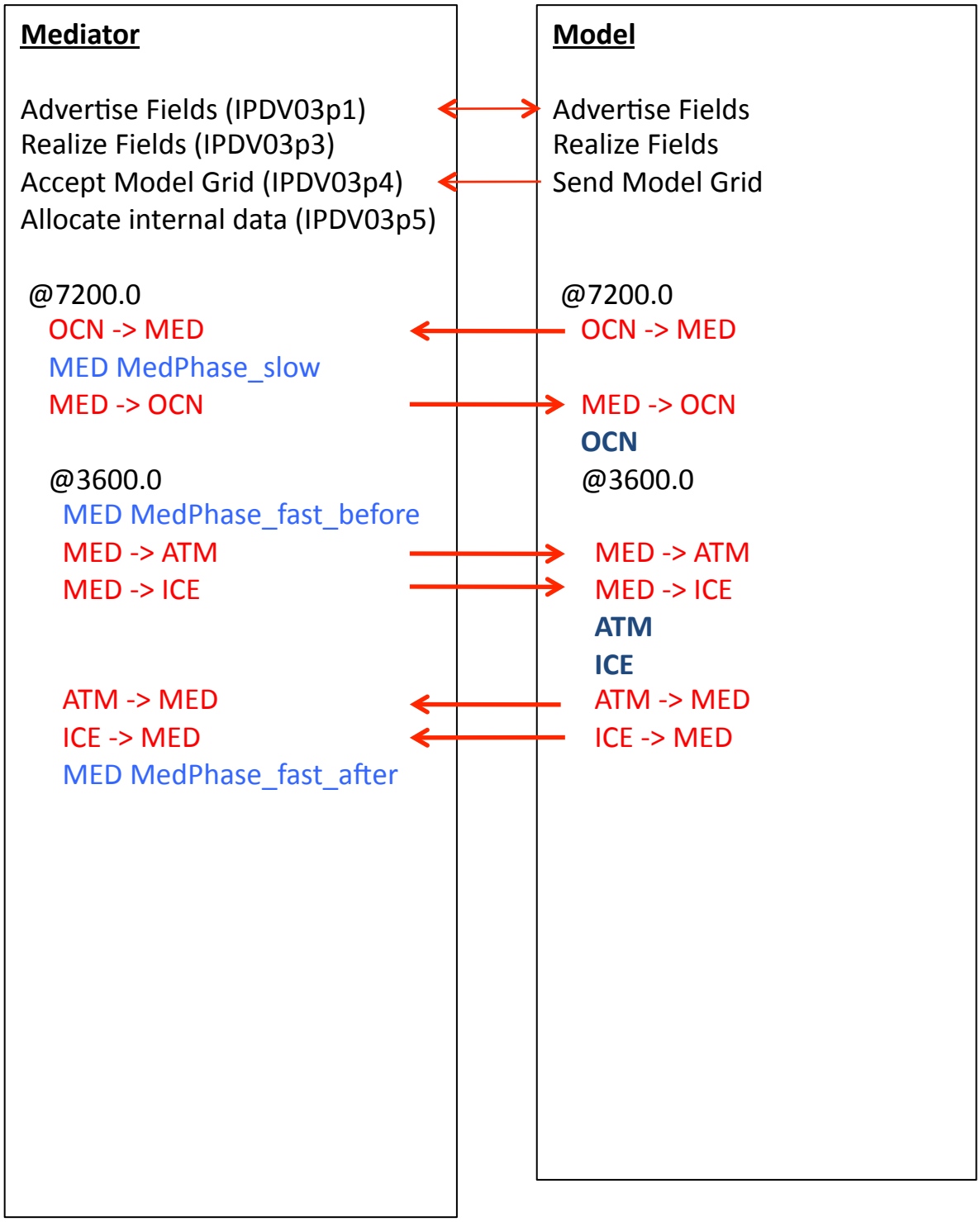
Mediator
Advertise Fields (IPDV03p1)
Realize Fields (IPDV03p3)
Accept Model Grid (IPDV03p4)
Allocate internal data (IPDV03p5)
@7200.0
OCN -> MED
MED MedPhase_slow
MED -> OCN
@3600.0
MED MedPhase_fast_before
MED -> ATM
MED -> ICE
ATM -> MED
ICE -> MED
MED MedPhase_fast_after
Model
Advertise Fields
Realize Fields
Send Model Grid
@7200.0
OCN -> MED
MED -> OCN
OCN
@3600.0
MED -> ATM
MED -> ICE
ATM
ICE
ATM -> MED
ICE -> MED

Mediator Implementation DataTypes

```
type(ESMF_State)     :: NState_AtmImp   ! Atm Import nested state
type(ESMF_State)     :: NState_OcnImp   ! Ocn Import nested state
type(ESMF_State)     :: NState_IceImp   ! Ice Import nested state
type(ESMF_State)     :: NState_AtmExp   ! Atm Export nested state
type(ESMF_State)     :: NState_OcnExp   ! Ocn Export nested state
type(ESMF_State)     :: NState_IceExp   ! Ice Export nested state

type(ESMF_FieldBundle):: FBAtm_a     ! Atm export data on atm grid
type(ESMF_FieldBundle):: FBAtm_o     ! Atm export data mapped to ocn grid
type(ESMF_FieldBundle):: FBAtm_i     ! Atm export data mapped to ice grid
type(ESMF_FieldBundle):: FBOcn_a     ! Ocn export data mapped to atm grid
type(ESMF_FieldBundle):: FBOcn_o     ! Ocn export data on ocn grid
type(ESMF_FieldBundle):: FBOcn_i     ! Ocn export data mapped to ice grid
type(ESMF_FieldBundle):: FBIce_a     ! Ice export data mapped to atm grid
type(ESMF_FieldBundle):: FBIce_o     ! Ice export data mapped to ocn grid
type(ESMF_FieldBundle):: FBIce_i     ! Ice export data on ice grid
type(ESMF_FieldBundle):: FBforAtm    ! data storage for atm import
type(ESMF_FieldBundle):: FBforOcn    ! data storage for ocn import
type(ESMF_FieldBundle):: FBforIce    ! data storage for ice import

integer              :: accumcntAtm ! accumulator counter
integer              :: accumcntOcn ! accumulator counter
integer              :: accumcntIce ! accumulator counter
type(ESMF_FieldBundle):: FBaccumAtm  ! accumulator of atm export data
type(ESMF_FieldBundle):: FBaccumOcn  ! accumulator of ocn export data
type(ESMF_FieldBundle):: FBaccumIce  ! accumulator of ice export data

type(ESMF_RouteHandle):: RH_a2o_bil    ! atm to ocn
type(ESMF_RouteHandle):: RH_o2a_bil    ! ocn to atm
type(ESMF_RouteHandle):: RH_a2i_bil    ! atm to ice
type(ESMF_RouteHandle):: RH_i2a_bil    ! ice to atm
type(ESMF_RouteHandle):: RH_o2i_bil    ! ocn to ice
type(ESMF_RouteHandle):: RH_i2o_bil    ! ice to ocn
type(ESMF_RouteHandle):: RH_i2a_nstod  ! ice to atm nstod
type(ESMF_RouteHandle):: RH_o2a_nstod  ! ocn to atm nstod
```

NEMS Big Schematic

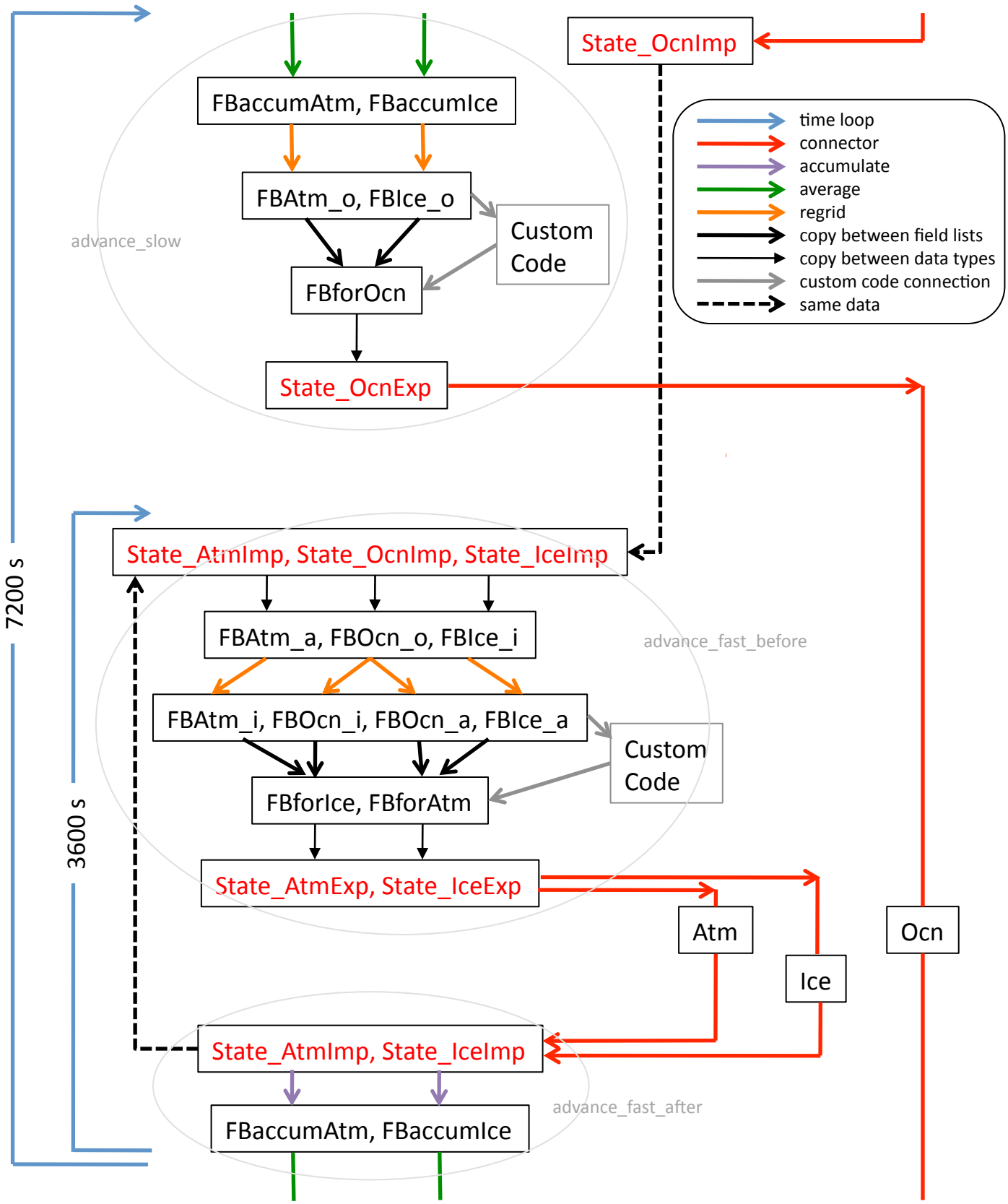

The End

Mediator Implementation - Data Flow

(Taken from Advance_fast_before)

- copy the fields out of the import State into a local fieldBundle
- regrid the fieldBundle data to other grids
- accumulate (if needed)
- copy fields between import and export field bundles
    - via automatic field matching or custom code
- average (if needed)
- copy data in fields bundles back to export State

```
! copy ocn data out of import state to local field bundle
 call fieldBundle_copy(is%wrap%FBOcn_o, NState_OcnImp, rc=rc)

! regrid entire ocn import field bundle to other grids
 call ESMF_FieldBundleRegrid(is%wrap%FBOcn_o, is%wrap%FBOcn_i, &
     routehandle=is%wrap%RH_o2i_bil, &
     termorderflag=(/ESMF_TERMORDER_SRCSEQ/), rc=rc)
 call ESMF_FieldBundleRegrid(is%wrap%FBOcn_o, is%wrap%FBOcn_a, &
     routehandle=is%wrap%RH_o2a_bil, &
     termorderflag=(/ESMF_TERMORDER_SRCSEQ/), rc=rc)

! copy ocn import fieldbundle to ice and atm export field bundles
 call fieldBundle_copy(is%wrap%FBforIce, is%wrap%FBOcn_i, rc=rc)
 call fieldBundle_copy(is%wrap%FBforAtm, is%wrap%FBOcn_a, rc=rc)

! custom calculations

! copy data in ice and atm field bundles to ice and atm export states
 call fieldBundle_copy(NState_AtmExp, is%wrap%FBforAtm, rc=rc)
 call fieldBundle_copy(NState_IceExp, is%wrap%FBforIce, rc=rc)
```

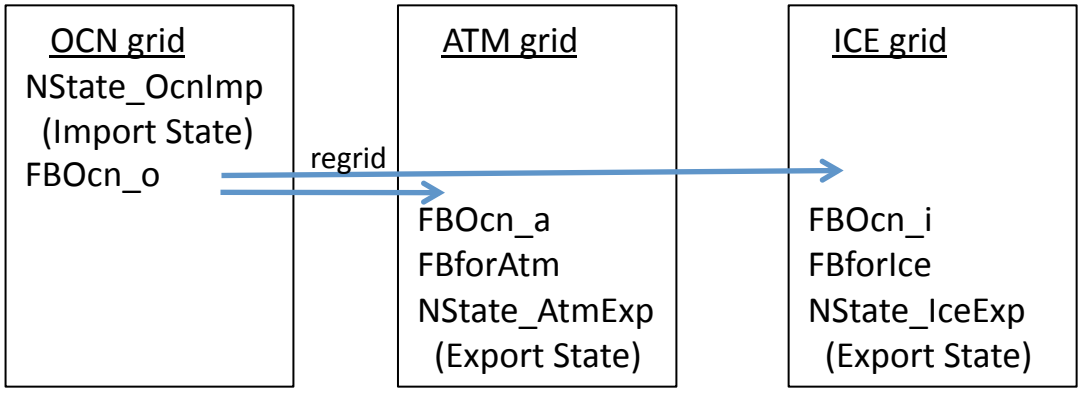

Top Level Run Sequence Again

```
# Run Sequence #
runSeq::
  @7200.0
    OCN -> MED
    MED MedPhase_slow
    MED -> OCN
    OCN
    @3600.0
      MED MedPhase_fast_before
      MED -> ATM
      MED -> ICE
      ATM
      ICE
      ATM -> MED
      ICE -> MED
      MED MedPhase_fast_after
    @
  @
::
```

Overview

code is in src/

module_EARTH_GRID_COMP.F90

defines the dictionary of coupled fields (line 206)

sets the run sequence from an input file (line 2266)

module_MEDIATOR.F90

contains all the mediator data and methods

Mediator Source Code (Initialization)

- Data declaration (L 55, 123)
- SetServices (L 143)
  - defines the local subroutine name for run sequence (“MedPhase_fast_after” -> subroutine Advance_fast_after) (L 232, 269, 306)
  - Define mediator field lists (L 314)
- IPDv03p1 (L 510)
  - create nested states (L 528)
  - advertise fields (L 541)
- IPDv03p3 (L 684)
  - realize fields (L 470)
- IPDv03p4 (L 897)
  - instantiate model grids on mediator (L 924)
- IPDv03p5 (L 1158)
  - allocate memory for fields in states (L 1183)
  - extract grids (L 1265)
  - initialize local fieldBundles (L 1407)
  - initialize routeHandles for regridding (L 1545)

Mediator Source Code (Advance/Run)

- Advance_fast_before (L 2392), runs before atm and ice and prepares their import states
  - copy data out of atm/ice/ocn import States to FBs (L 2458)
  - regrid to atm/ice (L 2468, 2500)
  - copy data from atm/ocn/ice import to atm/ice export FBs (L 2530)
  - custom calculations (L 2545)
  - copy data to export States for atm and ice (L 2572)
- Advance_fast_after (L 2620), runs after the atm and ice run and accumulates fields for the ocn
  - accumulate atm/ice exports (L 2713)
- Advance_slow (L 2750), runs before the ocn
  - average the atm/ice accumulators (L 2835)
  - regrid average atm/ice FBs to the ocn grid (L 2858)
  - copy data into ocn export FB (L 2889)
  - custom calculations for export FB (L 2897)
    - downward shortwave (L 3059)
    - specific humidity flux (L 3103)
  - zero accumulators (L 3121)
  - copy ocn export fields to ocn State (L 3155)